ZABER *Simplifying Motion Control*

X-MCB2 Series User's Manual

Dual axis stepper motor controllers (chopper drive) with I/O

Table of Contents

1. Disclaimer

Zaber's devices are not intended for use in any critical medical, aviation, or military applications or situations where a product's use or failure could cause personal injury, death, or damage to property. Zaber disclaims any and all liability for injury or other damages resulting from the use of our products.

2. Precautions

The X-MCB2 controller is intended to drive a wide variety of stepper motors. If you are controlling a third-party motor, you will need to configure settings to match the motor you are driving, especially driver.current.run (T:38) and driver.current.hold (T:39). For a Zaber peripheral, simply set the peripheralid (T:66) with the peripheral's ID number. See the detailed usage examples for more information on how to modify the settings, particularly for non-Zaber peripherals. Damage to the device may result if the settings are not correct.

⚠ WARNING: Serious damage can occur to stepper motor products when operated with significantly higher-than-rated current. The X-MCB2 controller can provide up to 2A of current to a peripheral. BEFORE CONNECTING A NEW DEVICE to the X-MCB2 controller, it is important to set the correct motor parameters in the controller. Please check the rated current for any peripheral device before changing the current settings on the X-MCB2 from the default values. To put the X-MCB2 controller into safe-mode (low current) settings, configure the peripheralid (T:66) setting to 0. If you have any questions, please contact Zaber Technical Support

3. Conventions used throughout this document

- Fixed width type indicates communication to and from a device. The ↵ symbol indicates a carriage return, which can be achieved by pressing enter when using a terminal program.
- An ASCII command followed by (T:xx) indicates a legacy T-Series Binary Protocol command that achieves the same result. For example, move abs 10000 (T:20:10000) shows that a move abs ASCII command can also be achieved with Binary command number 20.

  Not all ASCII commands have an equivalent Binary counterpart.

4. Quick Tutorial

We recommend using Zaber Console to communicate with the device(s). For other software options, see the Software page. Please refer to the ASCII Protocol Manual and/or Binary Protocol Manual for more detailed information on the available commands.

4.1. Initial Set-up

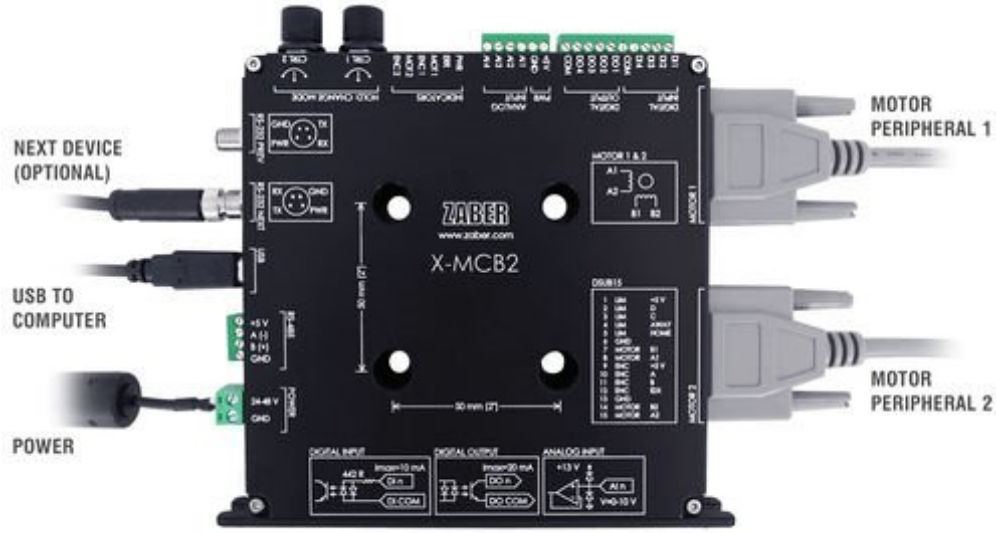

NOTE: Ensure no motors are connected to the controller before applying power for the first time. It is important that the controller is set to control the correct peripheral ID in order to avoid sending too much current to the motor. We try to set controllers for the peripherals they ship with, but it's good to check that they are correct, especially if you receive multiple peripherals of different models.

1. Power up all integrated devices and controllers and daisy chain them together using the RS-232 "Prev" and "Next" connectors (see Daisy-Chaining Devices for more details). Many products share power through the daisy-chain cables. The power indicator on each should light up.
2. Download and install Zaber Console. Start Zaber Console and select the communications port the first controller is connected to. For instructions on how to find the available communication ports on your system, please refer to: Appendix A - Available Communications Ports.
3. From the Console, issue a renumber (T:2) command to all devices (Zaber Console may

prompt you to do this also). The first device in the chain (closest to the computer) will become Device 1, the next will become Device 2, and so on.

4. On the new unit, configure the peripheralid (T:66) setting of each axis in Zaber Console with either the peripheralid setting in ASCII or the Peripheral Id setting in Binary. The Peripheral ID for a Zaber peripheral can be found on it's label as the PID. Alternatively a full list of Peripheral IDs can be found at: Zaber Support - Peripheral IDs. This step needs to be performed whenever a new model of motorized peripheral is connected to the controller. If a third-party peripheral is being driven, please contact Zaber Technical Support for assistance.
5. Connect the motorized peripherals.
6. Turn the knob to move a device. Most devices will only move in one direction until they reach a home sensor at one limit of travel. Then they will move in both directions over full travel.

4.2. Initialization

Every time the controller is powered up or reset, the motorized peripheral(s) should be returned to the home position. This is achieved by sending the home (T:1) command to the individual unit or all units. Until this is done, most devices will only allow motion in one direction, towards the sensor.

If it is not possible in your application to home the device after every power-up, see the tools parking (T:65) command. Parking allows the device to be turned off and then used at a later time without first having to home the axes.

4.3. Using the Device

Several commonly used ASCII commands, and their Binary equivalents, are shown below. For a full list of available commands, please refer to the Command Reference section below.

Command	Description
/1 1 get pos (T:60)	Query the current position of Device #1 Axis #1.
/1 1 move abs 10000 (T:20:10000)	Move Device #1, Axis #1 to position 10000 microsteps.
/2 1 move rel -12800 (T:21:-12800)	Move Device #2, Axis #1 in the negative direction by 12800 microsteps.
/1 stop (T:23)	Decelerate and stop ALL axes on Device 1. An axis number of 0 or no axis number implies all axes on the device, or the device itself.
/move vel 153600 (T:22:153600)	Move ALL devices and ALL axes in the positive direction at the speed 153600. A device address of 0 or no device address implies all devices in the chain.

4.3.1. Modifying Device Settings

Here are some examples if you would like to customize particular device settings. Refer to the ASCII Settings or Command Reference section for detailed descriptions of each setting.

Command	Description
/1 set maxspeed 100000 (T:42:100000)	Set the speed of all axes on the device.
/1 get maxspeed (T:53:42)	Query the axes' speed.
/1 system restore (T:36)	Restore all the settings of Device 1 to the default.

4.3.2. Built-In Help

Zaber X-Series devices feature a built-in help guide, providing a quick and easy reference for all Commands and Settings that the device has. To access the help, send: /1 help ↵ (for help with Device 1). The device number must be specified in the help command. This feature is only available in the ASCII protocol.

The device will respond with a detailed description on how to access specific information about commands and replies, as shown below:

```
@01 0 OK IDLE WR 0
#01 0 COMMAND USAGE:
#01 0  '/stop'     stop all devices
#01 0  '/1 stop'   stop device number 1
#01 0  '/1 2 stop'   stop device number 1 axis number 2
#01 0
#01 0 Type '/help commands' for a list of all top-level commands.
#01 0 Type '/help reply' for a quick reference on reply messages.
#01 0 Visit www.zaber.com/support for complete instruction manuals.
```

To access help for a specific command, for example the move command, send:

```
/1 help move
@01 0 OK IDLE -- 0
#01 0 move abs {x}             Move to absolute position
#01 0 move rel {x}             Move by relative position
#01 0 move vel {x}             Move at constant velocity
#01 0 move min                 Move to minimum position
#01 0 move max                 Move to maximum position
```

5. Device Overview

5.1. Connectors

All images are shown looking into the device.

5.1.1. Power

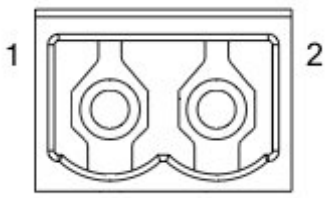

Pin	Description
1	24 - 48V
2	GND (Note: Zaber's power supplies ground this pin to AC Earth)

Note: To prevent damage to the device due to static buildup, the device should be properly grounded. The power supplies Zaber provides for X-Series devices are non-isolated and thus ground the device chassis to Earth via the negative terminal of the power supply. If for any reason you are using an isolated power supply, please ensure your device is grounded by connecting the negative terminal of the power connector to AC Earth.

5.1.2. RS-232 Communications

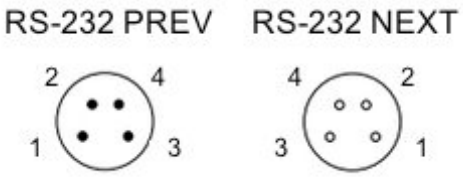

Pin	Previous	Next	
1	Power	Power	
2	Ground	Ground	
3	Receive	Transmit	
4	Transmit	Receive	

Default Settings:

- Baud Rate: 115200
- Protocol: Zaber ASCII

Specifications

- Supported Protocols: Zaber ASCII, Zaber Binary
- Supported Baudrates: 9600, 19200, 38400, 57600, 115200
- Bits: 8
- Parity: None
- Stop Bits: 1
- Flow Control: None

5.1.3. USB Communications

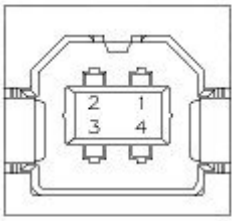

Specifications

- USB 2.0 Full Speed
- Communications Device Class, Abstract Control Model
- Default Protocol: Zaber ASCII
- Supported Protocols: Zaber ASCII, Zaber Binary

5.1.4. RS485 Communications

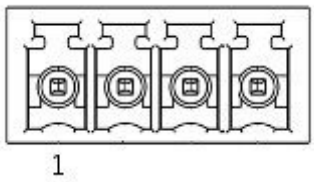

Pin	Description
1	+5V
2	A (Inverting)
3	B (Non Inverting)
4	GND

Default Settings

- Baud Rate: 115200
- Protocol: ASCII

Specifications

- Supported Protocols: Zaber ASCII
- Supported Baudrates: 1200, 4800, 9600, 19200, 38400, 57600, 115200
- Bits: 8
- Parity: None
- Stop Bits: 1
- Flow Control: None

Mating Products

Manufacturer & Part Number	Digikey	Mouser	Newark
TE Connectivity 284506-4	A98375-ND	571-2845064	12H8898

NOTE: When using the RS485 interface, the device will execute any global or broadcast commands but not respond to them.

5.1.5. Motor Interface

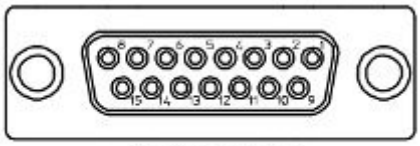

DSUB-15 Female
Motor Interface

Pin	Description
1	+5V
2	D Limit Sensor or Encoder Error
3	C Limit Sensor
4	Away Limit Sensor
5	Home Limit Sensor
6	Ground
7	Motor B1
8	Motor A1
9	Encoder +5V
10	Encoder A
11	Encoder B
12	Encoder Index
13	Encoder Ground
14	Motor B2
15	Motor A2

NOTE: The limit sensor inputs are pulled up to the internal supply rail and are designed to be pulled low by an open collector.

NOTE: All sensor and encoder inputs are non-isolated 5V TTL lines.

5.1.6. Digital Inputs/Outputs

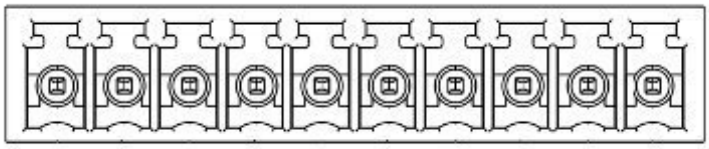

Pin	Description
1	Digital In 1
2	Digital In 2
3	Digital In 3
4	Digital In 4

5	Digital In Common
6	Digital Out 1
7	Digital Out 2
8	Digital Out 3
9	Digital Out 4
10	Digital Out Common

Specifications	Equivalent circuit
Maximum Input Voltage (per pin): 8.0V	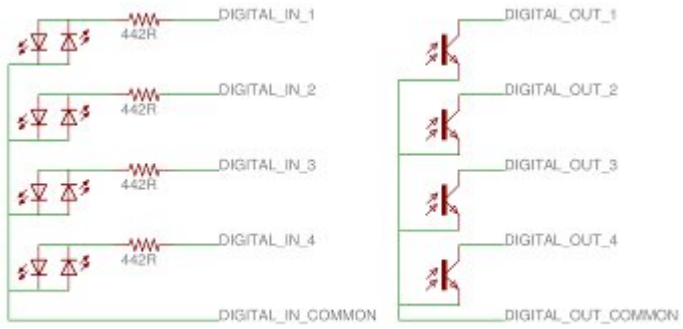
Minimum Input Logic High Voltage: 1.5V	
Maximum Output Current (per pin): 25mA	
Maximum Switchable Voltage (per pin): 60V	

Mating Products

TE Connectivity 284506-5 or 1986692-5

5.1.7. Analog Inputs

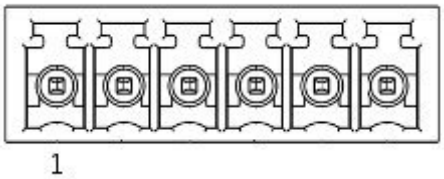

Pin	Description
1	+5V
2	GND
3	Analog In 1
4	Analog In 2
5	Analog In 3
6	Analog In 4

Specifications	Equivalent circuit
Absolute Maximum Input Range (per pin): 0V - 12.8V	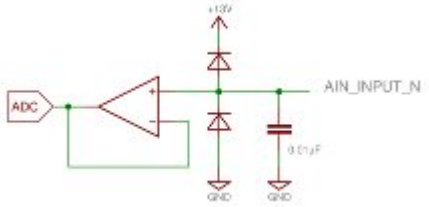
Nominal Input Range (per pin): 0V - 10.0V	
Resolution: 0.0125V	

+5V Output

The +5V and GND connections can provide power for low-current I/O applications. The pins can typically source up to 230mA of current, but the current limit must be derated by 110mA for each Zaber -DE peripheral attached to the controller. Note that this output is not isolated. If additional current is needed for I/O, an external power supply should be used.

Mating Products

TE Connectivity 284506-6 or 1986692-6

5.2. Indicators

Green - Power (PWR)

- On: Controller is operational.
- Blinking at 2Hz: The power supply voltage or device temperature is out of range.
- Fading in and out slowly: The device is parked. See the tools parking (T:65) command.

Red - Error (ERR)

- On/blinking: Device has lost its settings, or an error has occurred. Please contact Zaber Technical Support.

Yellow - Communication/Busy (MOT)

- On: Device is moving, or data is being transferred.
- Blinking: Device is under manual control via the knob (in Velocity mode). The blinking rate is proportional to movement speed.
- Blinking at fixed rate: Packet corruption has occurred for ASCII commands sent with a checksum.

Blue - Slip/Stall (ENC)

- On: The device is slipping.
- On-Off cycle every 2 sec: The device has stalled and stopped.

- Flashes: The stationary device has been forced out of position (2 short flashes every 1 sec), or the encoder has encountered a read error and raised the FQ warning flag (5 short flashes every 2 sec).

5.3. Communications

The X-MCB2 supports multiple communications interfaces and processes commands through the currently active interface, which is determined by the interface priorities. Enabling or connecting a higher priority interface will cause any commands received over the lower priority interface(s) to be ignored.

Interface Priority

1. USB
2. RS485
3. RS232

Daisy Chaining

Daisy Chaining is supported from USB to RS232 Next and RS232 Prev to RS232 Next. In order to chain from USB to RS232 the comm.usb.protocol setting must be the same as the comm.rs232.protocol setting.

6. Installation

The X-MCB2 can be connected to a computer as follows:

1. Plug the serial cable (X-SDC) into the computer's serial port and the device's Prev port. Alternatively, connect the USB cable (U-DC06) to the device and your computer instead. In order to use the integrated USB port on the X-MCB2, it is necessary to first install the appropriate USB driver. See Appendix B for instructions.Either plug the M8 to D-SUB serial adaptor (X-SDC) into the computer's serial port, or the M8 to USB adaptor (X-USBDC) into one of your computer's USB ports, then attach the device to the adaptor. For the USB adaptor, new computers will often be able to install the necessary drivers automatically when the cable is plugged in for the first time. If the computer reports that the driver installation was unsuccessful, you can download the drivers for Windows, Mac, or Linux here. Installation instructions and troubleshooting information are available for each operating system here. You may need to use a cable extension to reach your computer. There is no need to power-down or reboot the computer.
2. Connect the power plug of your power supply to the power connector of the unit. The green LED should light up indicating the unit has power.
3. Additional devices can simply be daisy-chained to the first. See Daisy-Chaining Devices below.

4. Install software from the Software page. For the initial setup, using Zaber Console is recommended.

As a simple first test, try entering:

/renumber ↵ (T:2)
/1 home ↵ (T:1)
/1 move rel 10000 ↵ (T:21:10000)

The parameter of 10000 in the move command above specifies 10000 microsteps. To see the microstep size (default resolution) for the peripheral and how it translates to displacement, first go to the product overview page, find your device, click through to the device's webpage, and click on the "Series Specs" tab. The microstep size (default resolution) will be shown in the list of product specs either in the "Group Specifications" section or the "Comparison" section.

6.1. Daisy-Chaining Devices

Multiple devices can be connected together in a chain through the Prev and Next connectors. This allows any number of devices to be controlled from a single connection to a computer, reducing cabling demands. In addition, X-Series devices carry power through the daisy chain, so in most cases a power supply only needs to be connected to one device in the chain. Whenever a device is added or removed from a chain, a renumber (T:2) command should be sent to prevent device-address conflicts.

To daisy-chain X-Series devices with T-Series and A-Series devices:

- Ensure all devices are set to the same communication protocol and baud rate before connecting them. If any T-Series devices will be in the chain, then the communication protocol must be Binary at 9600 baud rate.
- Connect any X-Series devices at the start of the chain (closest to the computer). This configuration will reduce the number of adaptor cables required.
- Connect a T-XDC (or S-XDC for daisy-chaining an A-MCB2) adaptor cable to the Next port of the last X-Series device in the chain, and to the Prev port of the T-Series or A-Series device.
- Power supplied to an X-Series device will not be transmitted to any T-Series or A-Series devices in the chain.
- Contact Zaber Technical Support for assistance selecting connecting cables when daisy-chaining multiple series.

6.2. Physical Installation

The X-MCB2 is designed to mount to 25mm or 2" pitch optical breadboards using M6 or 1/4" screws, respectively, or for use on a desk or table. It can be mounted to a breadboard in two configurations:

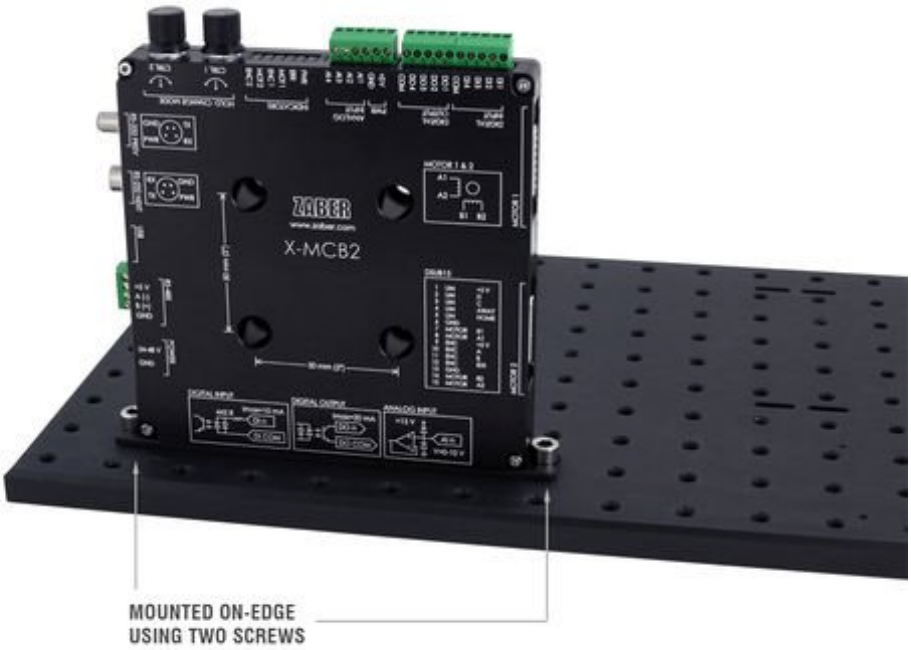

TIP: When mounting on-edge, it is easier to connect the cables nearest to the adaptor plate after mounting the unit to the optical breadboard.

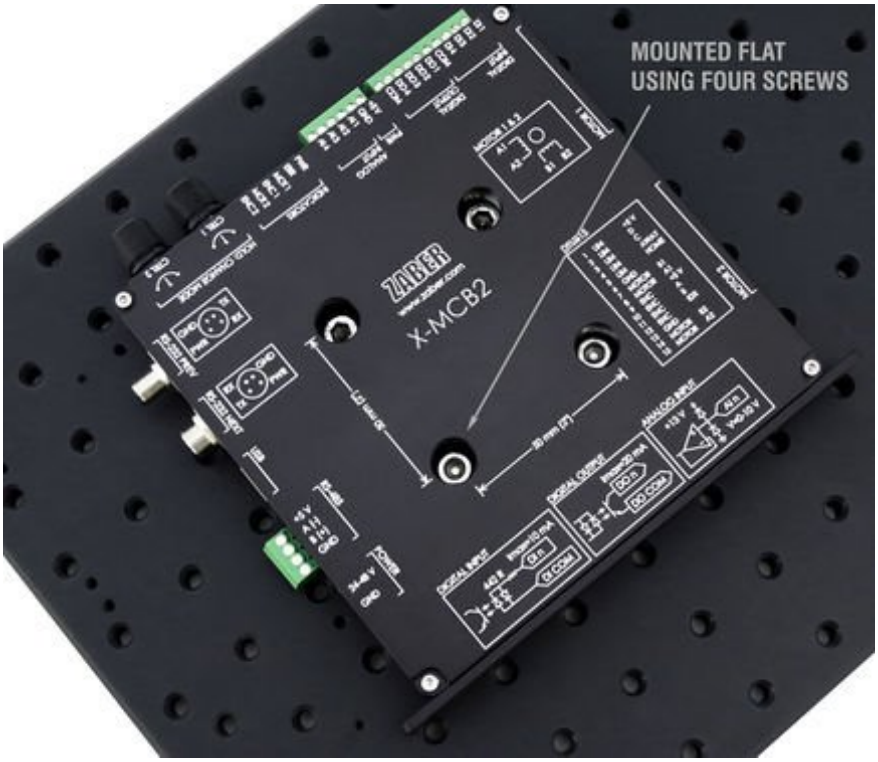

In situations where mounting is not necessary, 4 adhesive rubber feet are provided which can be applied to the underside of the unit to prevent it from sliding on the surface of a desk or table.

To apply the feet, peel each from the protective backing and place them firmly in the corner recesses on the underside of the unit.

7. Manual Control

Most X-Series motion control products have an integrated, depressible knob with 20 detents per revolution, allowing devices to be controlled without the use of a computer. There are two manual movement modes available: Velocity and Displacement. Switch between these modes by holding down the knob for 1 second or by configuring the knob.mode (T:109) setting.

On power-up, the device will only travel towards the motor from its start-up position until the home position is reached. Once the device has been homed, the full range of travel becomes available.

7.1. Velocity Mode

Turn the knob clockwise to move the device in the positive direction (extend) or counter-clockwise for negative direction (retract). Each detent of the knob increases the speed of the carriage.

There are 16 speeds in each direction. The velocity profile and maximum speed can be configured via the knob.speedprofile (T:112) and knob.maxspeed (T:111) settings. The device stops and resets the knob upon arriving at the end of travel.

7.2. Displacement Mode

Turn the knob clockwise to move the device in the positive direction (extend), counter-clockwise for negative direction (retract). Each detent of the knob moves the device a fixed number of microsteps, specified by the knob.distance (T:110) setting. If knob.distance (T:110) is set to 0, each detent of the knob will move to the next index position, similar to move index (T:78) movements. The device moves at the speed specified by the maxspeed (T:42) setting, or the slower of maxspeed (T:42) and limit.approach.maxspeed (T:41) if the device has not been homed. If there are fewer than knob.distance (T:110) microsteps to the end of travel and another move is requested, the device will move to the end of travel and then stop.

7.3. Summary of knob functionality

- Turning the knob: Moves the device in the direction of knob turn.
- Pressing the knob: Decelerates and stops the device (identical to a stop (T:23) command). Instantly stops the device, if the device is already decelerating.
- Pressing and holding the knob for 1 sec: Toggles between Velocity Mode and Displacement Mode.

8. Trajectory Control and Behaviour

This section describes the behaviour of the device trajectory when a movement command is issued.

8.1. Software Position Limits

The travel range of the device is limited by the Minimum Position and Maximum Position settings. Setting a peripheral ID will configure these settings to match the physical travel range. If a customized range is desired, it can be changed by configuring the limit.min (T:106) and limit.max (T:44) settings to appropriate values.

Minimum Position

When the Current Position is less than the Minimum Position value, the device cannot move in the negative direction (towards the motor).

Maximum Position

When the Current Position is greater than the Maximum Position value, the device cannot move in the positive direction (away from the motor).

8.2. Movement Speed

The movement speed of the device depends on device status and various speed settings. If the device has not been initialized by the home (T:1) command or by moving towards the home end of the device, movement speed will be constrained to fail-safe values. The home status of the device can be determined by reading the limit.sensor.triggered (T:53) setting (the binary command additionally requires a value of 103).

Movement speed of the device is specified below:

move vel (T:22)

The device will move at the specified speed regardless of home status.

Knob movement in Velocity Mode

The device will move at the specified speed regardless of home status.

The speed is specified by the knob.speedprofile (T:112) and knob.maxspeed (T:111) settings.

Other movement commands - when the device has not been homed

The device will move at the slower of the maxspeed (T:42) and limit.approach.maxspeed (T:41) settings.

Other movement commands - when the device has been homed

The device will move at the speed specified by the maxspeed (T:42) setting.

9. Quick Command Reference

All X-Series devices ship with the ASCII Protocol enabled by default but the Binary Protocol is also supported.

9.1. ASCII Protocol

The following table offers a quick command and setting reference for the X-MCB2. Follow the links to view a detailed description of each instruction or refer to the ASCII Protocol Manual.

9.1.1. Quick Commands

Parameters in square brackets, e.g. [clr], indicate that the parameter is optional.
Parameters in italics, e.g. value, indicate that data, typically a number, needs to be provided.
Parameters separated by a pipe, e.g. abs|rel, indicate that one of the parameters in the set need to be provided.

Command	Scope	Parameter(s)	Returns	Firmware Versions	Description
calibration	Device	Refer to the documentation	0	6.24+	Configure linear encoder calibration.
estop	Axis		0	6.06+	Instantly stops motorized movement.
get	Device and Axis	setting	value	6.06+	Retrieves the current value of the device or axis setting.
help	Device	commands reply warnflags enums command ... enum	0	6.06+	Displays the help information for the system.
home	Axis		0	6.06+	Moves the axis to the home position.
io info	Device	[ai|ao|do|di]	ports	6.06+	Returns the number of I/O channels the device has.
io get	Device	ai|ao|do|di [channel]	value	6.06+	Returns the current value of the specified I/O channel type.
io set	Device	ao channel value do channel value do port value value2. ..	0	6.06+	Sets the specified output channel to value.

lockstep	Device	Refer to the documentation	Refer to the documentation	6.15+	Sets up and controls synchronized motion of a group of parallel axes.
move	Axis	abs|rel|vel value min|max stored number index number (6.21+) sin amplitude period [count] (6.22+) sin stop (6.22+)	0	6.06+	Moves the axis to various positions along its travel.
renumber	Device	value	0	6.06+	Renumbers all devices in the chain.
set	Device and Axis	setting value	0	6.06+	Sets the device or axis setting setting to the value.
stop	Axis		0	6.06+	Decelerates the axis and brings it to a halt.
stream	Device	Refer to the documentation	Refer to the documentation	6.12+	Performs an action related to streamed, interpolated motion.
system reset	Device		0	6.06+	Resets the device, as it would appear after power up.
system restore	Device		0	6.06+	Restores common device settings to their default values.
tools echo	Device	(message)	0	6.06+	Echoes the provided message (if any) back to the user.
tools findrange	Axis		0	6.10+	Uses the home and away sensors to set the valid range of the axis.
tools gotolimit	Axis	limit dir action update	0	6.06+	Moves the axis to a limit sensor and performs the provided actions.
tools parking	Device	state|park|unpark	0|1	6.06+	Parking allows the device to be turned off and used at a later time without first having to home.
tools setcomm	Device	rs232baud protocol	0	6.06+	Sets RS232 baud rate and communication protocol for RS232 and USB.
tools storepos	Axis	number [position|current]	0|position	6.06+	Stores a number of positions for easy movement.

trigger	Device	Refer to the documentation	0	6.06+	Configures actions to be performed on the device when a certain condition is met.
trigger dist	Device	number axis displacement number enable [count] number disable	0	6.06+	Configures a trigger to toggle a digital output line every displacement microsteps.
trigger time	Device	number period number enable [count] number disable	0	6.06+	Configures a periodic trigger to toggle a digital output line every period milliseconds.
virtual	Device	Refer to the documentation	Refer to the documentation	6.18+	Sets up and controls a pair of axes to allow movement along a virtual axis.
warnings	Axis	[clear]	0	6.06+	Displays the active device and axis warnings, optionally clearing them if applicable.

9.1.2. Quick Device Settings

The settings listed below can be inspected and modified with the get and set commands described above.

Setting	Scope	Writable	Firmware Versions	Description
accel	Axis	Yes	6.06+	Sets the acceleration used to modify the speed.
calibration.type	Axis	No	6.24+	The type of calibration saved for the axis.
cloop.counts	Axis	Yes	6.06+	The number of counts generated by the encoder for one full revolution.
cloop.displace.tolerance	Axis	Yes	6.19+	The minimum deviation in the position of a stationary axis that will register as a displacement.
cloop.duration.max	Axis	Yes	6.17+	The duration for attempting fine position correction.
cloop.mode	Axis	Yes	6.06+	The closed-loop (slip, stall, and displacement detection and recovery) control mode.
cloop.stalltimeout	Axis	Yes	6.06+	The amount of time to wait after a stall/displacement condition, in milliseconds.
cloop.steps	Axis	Yes	6.06+	The number of full steps required for the motor to complete one revolution.
comm.address	Device	Yes	6.06+	The device address.

comm.alert	Device	Yes	6.06+	The device will send alert messages when this setting is 1.
comm.checksum	Device	Yes	6.06+	The device includes checksums in its messages if this setting is set to 1.
comm.protocol	Device	Yes	6.06+	The communications protocol used by the device on the current interface.
comm.rs232.baud	Device	Yes	6.06+	The baud rate used by RS232 Prev and Next interfaces.
comm.rs232.protocol	Device	Yes	6.09+	The protocol used by RS232 Prev and Next interfaces.
comm.rs485.baud	Device	Yes	6.09+	The baud rate used by RS485 interface.
comm.rs485.enable	Device	Yes	6.09+	Enables the RS485 interface.
comm.rs485.protocol	Device	Yes	6.09+	The protocol used by RS485 interface.
comm.usb.protocol	Device	Yes	6.09+	The protocol used by the usb interface.
deviceid	Device	No	6.06+	The device ID for the unit.
driver.current.hold	Axis	Yes	6.06+	Current used to hold the motor in position, in 20 mA DC increments.
driver.current.max	Axis	No	6.16+	Maximum legal value of driver.current.hold and driver.current.run.
driver.current.run	Axis	Yes	6.06+	Current used to drive the motor, in 14.1 mA RMS (20 mA peak) increments.
driver.dir	Axis	Yes	6.06+	Reverse the motor driver output direction.
driver.temperature	Axis	No	6.06+	The current temperature of the axis driver, in degrees Celsius.
encoder.count	Axis	Yes	6.06+	The recorded counts of the axis encoder.
encoder.count.calibrated	Axis	No	6.24+	The calibrated counts of the axis encoder.
encoder.dir	Axis	Yes	6.06+	Inverts the counting direction for the axis encoder.
encoder.error	Axis	No	6.17+	Position error measured by encoder.
encoder.fault.type	Axis	Yes	6.24+	The type of fault signal provided by the encoder.
encoder.filter	Axis	Yes	6.06+	Enable and set up digital filtering of the encoder inputs.
encoder.index.count	Axis	Yes	6.06+	The recorded counts of the axis encoder index pulse.
encoder.index.mode	Axis	Yes	6.06+	The operating mode of the axis encoder index signal.
encoder.index.phase	Axis	Yes	6.06+	The required phase for an index pulse to be counted.

encoder.mode	Axis	Yes	6.06+	The operating mode of the axis encoder.
encoder.pos	Axis	No	6.17+	Position measured by encoder.
knob.dir	Axis	Yes	6.06+	Sets the movement direction for the knob.
knob.distance	Axis	Yes	6.06+	Sets how far the device moves with each step of the knob in displacement mode, in units of microsteps.
knob.enable	Axis	Yes	6.06+	Disable the use of the knob when set to 0.
knob.maxspeed	Axis	Yes	6.06+	The maximum speed that can be reached using the knob in velocity mode.
knob.mode	Axis	Yes	6.06+	Sets the mode of the manual control knob.
knob.speedprofile	Axis	Yes	6.06+	Sets the profile to be used per increment when in velocity mode.
limit.approach.maxspeed	Axis	Yes	6.06+	Maximum speed used when approaching a limit sensor.
limit.cycle.dist	Axis	Yes	6.20+	The length of one full rotation.
limit.detect.decelonly	Axis	Yes	6.06+	Deceleration used when stopping after a limit sensor has triggered.
limit.detect.maxspeed	Axis	Yes	6.06+	Maximum speed used when moving away from a limit sensor.
limit.home.action	Axis	Yes	6.06+	Automatic limit switch action.
limit.home.edge	Axis	Yes	6.06+	Sensor edge to align action to.
limit.home.pos	Axis	Yes	6.06+	The updated position of the sensor, when triggered.
limit.home.posupdate	Axis	Yes	6.06+	Position update to occur when sensor is triggered.
limit.home.preset	Axis	Yes	6.06+	The default position of the home sensor.
limit.home.state	Axis	No	6.06+	The state of the home sensor.
limit.home.triggered	Axis	No	6.06+	Whether the home sensor has been triggered previously.
limit.home.type	Axis	Yes	6.06+	The type of home sensor connected.
limit.away.action	Axis	Yes	6.06+	Automatic limit switch action.
limit.away.edge	Axis	Yes	6.06+	Sensor edge to align action to.
limit.away.pos	Axis	Yes	6.06+	The updated position of the sensor, when triggered.
limit.away.posupdate	Axis	Yes	6.06+	Position update to occur when sensor is triggered.
limit.away.preset	Axis	Yes	6.06+	The default position of the away sensor.

limit.away.state	Axis	No	6.06+	The state of the home sensor.
limit.away.triggered	Axis	No	6.06+	Whether the away sensor has been triggered previously.
limit.away.type	Axis	Yes	6.06+	The type of away sensor connected.
limit.c.action	Axis	Yes	6.06+	Automatic limit switch action.
limit.c.edge	Axis	Yes	6.06+	Sensor edge to align action to.
limit.c.pos	Axis	Yes	6.06+	The updated position of the sensor, when triggered.
limit.c.posupdate	Axis	Yes	6.06+	Position update to occur when sensor is triggered.
limit.c.preset	Axis	Yes	6.06+	The default position of the c limit sensor.
limit.c.state	Axis	No	6.06+	The state of the c limit sensor.
limit.c.triggered	Axis	No	6.06+	Whether the c limit sensor has been triggered previously.
limit.c.type	Axis	Yes	6.06+	The type of c limit sensor connected.
limit.d.action	Axis	Yes	6.06+	Automatic limit switch action.
limit.d.edge	Axis	Yes	6.06+	Sensor edge to align action to.
limit.d.pos	Axis	Yes	6.06+	The updated position of the sensor, when triggered.
limit.d.posupdate	Axis	Yes	6.06+	Position update to occur when sensor is triggered.
limit.d.preset	Axis	Yes	6.06+	The default position of the d limit sensor.
limit.d.state	Axis	No	6.06+	The state of the d limit sensor.
limit.d.triggered	Axis	No	6.06+	Whether the d limit sensor has been triggered previously.
limit.d.type	Axis	Yes	6.06+	The type of d limit sensor connected.
limit.max	Axis	Yes	6.06+	The maximum position the device can move to, measured in microsteps.
limit.min	Axis	Yes	6.06+	The minimum position the device can move to, measured in microsteps.
limit.start.pos	Axis	Yes	6.19+	Start up position of the axis.
limit.swapinputs	Axis	Yes	6.06+	Reverses the limit positions by swapping the home and away sensors.
lockstep.numgroups	Device	No	6.15+	The number of lockstep groups provided on the device.
lockstep.tolerance	Axis	Yes	6.15+	The maximum twist distance between axes in a lockstep group before a stop and untwist occurs.

maxspeed	Axis	Yes	6.06+	The maximum speed the device moves at.
motion.accelonly	Axis	Yes	6.06+	Sets the acceleration used to increase the speed.
motion.decelonly	Axis	Yes	6.06+	Sets the deceleration used when decreasing the speed.
motion.index.dist	Axis	Yes	6.21+	The distance between consecutive index positions.
motion.index.num	Axis	No	6.22+	The current index number.
peripheralid	Axis	Yes	6.06+	The ID of the connected peripheral.
peripheral.serial	Axis	Yes	6.24+	The serial number of the attached peripheral.
pos	Axis	Yes	6.06+	The current absolute position of the device.
resolution	Axis	Yes	6.06+	Microstep resolution
stream.numbufs	Device	No	6.14+	The number of stream buffers provided in the device.
stream.numstreams	Device	No	6.14+	The number of streams provided in the device.
system.access	Device	Yes	6.06+	Sets the access level of the user.
system.axiscount	Device	No	6.06+	The number of axes in the device.
system.current	Device	No	6.06+	The current being drawn by the device and motors.
system.led.enable	Device	Yes	6.06+	Enables the front panel LEDs.
system.serial	Device	No	6.15+	The serial number of the device.
system.temperature	Device	No	6.06+	The current temperature of the unit, in degrees Celsius.
system.voltage	Device	No	6.06+	The voltage being applied to the device.
version	Device	No	6.06+	The firmware version of the device.
version.build	Device	No	6.17+	The build number of the device's firmware.
virtual.numvirtual	Device	No	6.18+	Number of virtual axes.

9.2. Binary Protocol

The following table offers a quick command reference for the X-MCB2. For convenience, you may sort the table below by instruction name, command number, or reply number. Follow the links to view a detailed description of each instruction or refer to the Binary Protocol Manual.

Instruction Name	Command#	Command Data	Command Type	Reply Data
Reset	0	Ignored	Command	None
Home	1	Ignored	Command	Final position (in this case 0)
Renumber*	2	Ignored	Command	Device ID
Read Register	5	Register Address	Command	Data
Set Active Register	6	Register Address	Setting	Register Address
Write Register	7	Data	Command	Data
Move Tracking	8	n/a	Reply	Tracking Position
Limit Active	9	n/a	Reply	Final Position
Manual Move Tracking	10	n/a	Reply	Tracking Position
Manual Move	11	n/a	Reply	Final Position
Slip Tracking	12	n/a	Reply	Tracking Position
Unexpected Position	13	n/a	Reply	Final Position
Store Current Position*	16	Address	Command	Address
Return Stored Position	17	Address	Command	Stored Position
Move To Stored Position	18	Address	Command	Final Position
Move Absolute	20	Absolute Position	Command	Final Position
Move Relative	21	Relative Position	Command	Final Position
Move At Constant Speed	22	Speed	Command	Speed
Stop	23	Ignored	Command	Final Position
Restore Settings*	36	Peripheral ID	Command	Peripheral ID
Set Microstep Resolution*	37	Microsteps	Setting	Microsteps
Set Running Current*	38	Value	Setting	Value
Set Hold Current*	39	Value	Setting	Value

Set Device Mode*	40	Mode	Setting	Mode
Set Home Speed*	41	Speed	Setting	Speed
Set Target Speed*	42	Speed	Setting	Speed
Set Acceleration*	43	Acceleration	Setting	Acceleration
Set Maximum Position*	44	Range	Setting	Range
Set Current Position	45	New Position	Setting	New Position
Set Home Offset*	47	Offset	Setting	Offset
Set Alias Number*	48	Alias Number	Setting	Alias Number
Return Device ID	50	Ignored	Read-Only Setting	Device ID
Return Firmware Version	51	Ignored	Read-Only Setting	Version
Return Power Supply Voltage	52	Ignored	Read-Only Setting	Voltage
Return Setting	53	Setting Number	Command	Setting Value
Return Status	54	Ignored	Read-Only Setting	Status
Echo Data	55	Data	Command	Data
Return Firmware Build	56	Ignored	Read-Only Setting	Build Number
Return Current Position	60	Ignored	Read-Only Setting	Position
Return Serial Number	63	Ignored	Read-Only Setting	Serial Number
Set Park State*	65	Park State	Setting	Position
Set Peripheral ID*	66	Peripheral ID	Setting	Peripheral ID
Return Digital Input Count	67	Ignored	Read-Only Setting	Pin Count
Read Digital Input	68	Pin Number	Command	Pin State
Read All Digital Inputs	69	Ignored	Command	Pin States
Return Digital Output Count	70	Ignored	Read-Only Setting	Pin Count
Read Digital Output	71	Pin Number	Command	Pin State
Read All Digital Outputs	72	Ignored	Command	Pin States
Write Digital Output	73	See Description	Command	Same as Command Data

Write All Digital Outputs	74	Pin States	Command	Pin States
Return Analog Input Count	75	Ignored	Read-Only Setting	Pin Count
Read Analog Input	76	Pin Number	Command	Voltage
Return Analog Output Count	77	Ignored	Read-Only Setting	Pin Count
Move Index	78	Index Number	Command	Final Position
Set Index Distance	79	Distance	Setting	Distance
Set Cycle Distance	80	Distance	Setting	Distance
Return Encoder Count	82	Ignored	Read-Only Setting	Encoder Count
Return Calibrated Encoder Count	83	Ignored	Read-Only Setting	Calibrated Encoder Count
Return Calibration Type	84	Ignored	Read-Only Setting	Calibration Type
Return Calibration Error	85	Ignored	Read-Only Setting	Calibration Error
Set Peripheral Serial Number*	86	Peripheral Serial Number	Setting	Peripheral Serial Number
Set Auto-Reply Disabled Mode*	101	Auto-Reply Mode	Setting	Auto-Reply Mode
Set Message ID Mode*	102	Message ID Mode	Setting	Message ID Mode
Set Home Status	103	Home Status	Setting	Home Status
Set Home Sensor Type*	104	Home Sensor Type	Setting	Home Sensor Type
Set Auto-Home Disabled Mode*	105	Auto-Home Disabled Mode	Setting	Auto-Home Disabled Mode
Set Minimum Position*	106	Minimum Position	Setting	Minimum Position
Set Knob Disabled Mode*	107	Knob Disabled Mode	Setting	Knob Disabled Mode
Set Knob Direction*	108	Direction	Setting	Direction
Set Knob Movement Mode*	109	Movement Mode	Setting	Movement Mode
Set Knob Jog Size*	110	Jog Size	Setting	Jog Size

Set Knob Velocity Scale*	111	Velocity Scale	Setting	Velocity Scale
Set Knob Velocity Profile*	112	Velocity Profile	Setting	Velocity Profile
Set Acceleration Only*	113	Acceleration	Setting	Acceleration
Set Deceleration Only*	114	Deceleration	Setting	Deceleration
Set Move Tracking Mode*	115	Tracking Mode	Setting	Tracking Mode
Set Manual Move Tracking Disabled Mode*	116	Tracking Mode	Setting	Tracking Mode
Set Move Tracking Period*	117	Tracking Period	Setting	Tracking Period
Set Closed-Loop Mode*	118	Closed-Loop Mode	Setting	Closed-Loop Mode
Set Slip Tracking Period*	119	Tracking Period	Setting	Tracking Period
Set Stall Timeout*	120	Timeout	Setting	Timeout
Set Device Direction*	121	Direction	Setting	Direction
Set Baud Rate*	122	Baud Rate	Setting	Baud Rate
Set Protocol*	123	Protocol	Setting	Protocol
Convert To Ascii*	124	Baud Rate	Command	Baud Rate
Error	255	n/a	Reply	Error Code

* The settings for these commands are saved in non-volatile memory, i.e. the setting persists even if the device is powered down. To restore all settings to factory default, use command 36.

10. I/O Usage and Examples

The X-MCB2 features a range of flexible input and output options that can be easily examined and controlled from user software. The input and output capabilities of the X-MCB2 can also be used with triggers to perform actions based on the current value of the I/O channel.

To minimize the number of power supplies needed, the on-board +5V and GND connections can be used as non-isolated power supplies for I/O circuitry as long as the current draw remains below 200 mA.

10.1. Digital Inputs

The digital inputs on the X-MCB2 are fully opto-isolated and bi-directional, giving added flexibility when interfacing to external equipment. The two examples below demonstrate how the common line can be connected to a power rail or to ground, depending on the application.

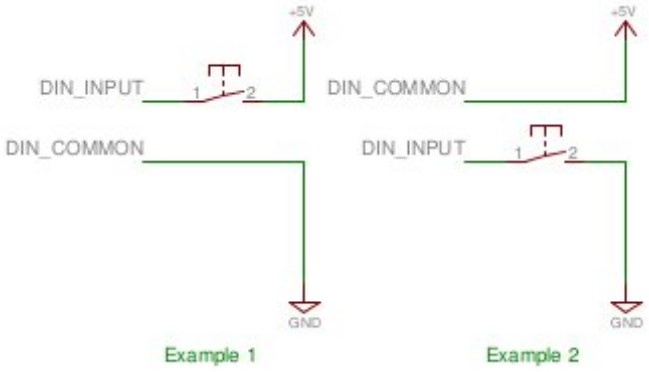

Each digital input contains an internal current limiting resistor of 442 ohms. While this value is suitable for driving the inputs with 5V (as shown in the circuit above), higher voltages will require the addition of a series resistor. A list of recommended values for the external resistor and example circuit are shown below.

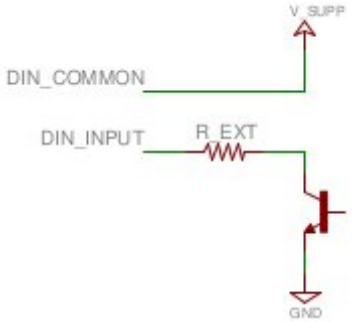

V_SUPP (V)	R_EXT (Ohms)	Power (mW)
0 - 8	0R	n/a
8 - 15	500R	125mW
15 - 24	1500	250mW

The circuit above also shows how to interface with an open collector output from another device.

Reading the inputs is accomplished by sending the unit an io get command, as shown below.

```
/1 io get di
@01 0 OK IDLE –- 0 0 1 0 /1 io get di 1
@01 0 OK IDLE -- 0
```

The first command queries all inputs on the device and shows that input 3 is high and all others are low. The second command queries a specific input on the device, in this case input 1, which is low.

10.2. Digital Outputs

All digital outputs on the X-MCB2 are fully optoisolated and capable of sinking 15mA each at up to 50V. The first example circuit below shows how to drive an LED from one of the digital outputs. In order to switch loads with a higher current draw, for example a relay, an external switching transistor is required, as shown in example 2.

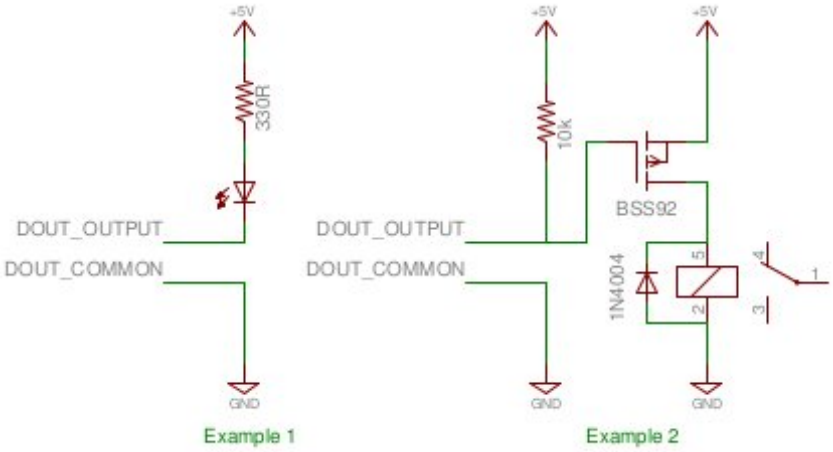

The digital outputs are set through the io set command, as shown below.

```
/1 io set do 1 1
@01 0 OK IDLE – 0 /1 io set do 1 0
@01 0 OK IDLE – 0
```

The first command sets the first digital output, which would cause the LED in example 1 above to glow. The second command clears the output, turning off the LED.

TTL Outputs

Additional circuitry is required to get TTL signal levels from the X-MCB2, as shown below.

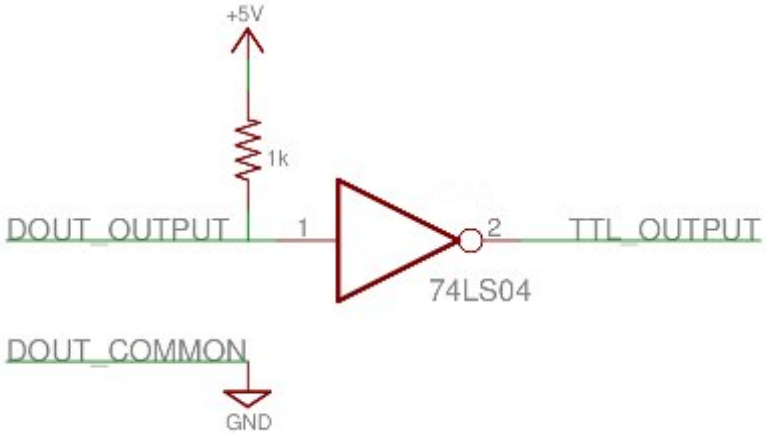

The 74LS04 contains 6 inverters so it is possible to convert all of the digital outputs with one IC. In order to maintain isolation, it is recommended that the 5V and GND supply connections come from the device requiring the TTL signalling. It is, however, possible to use the 5V and GND connections from the Analog Output connector on the X-MCB2 to power the external device, as long as the current limits are adhered to.

10.3. Analog Inputs

The analog inputs on the X-MCB2 accept and display voltages in the range of 0 – 10V. In order to measure other analog variables, a transducer or sensor is required that outputs an appropriate voltage range. As transducers typically provide low voltage signals, an amplifier and buffer circuit is required to interface a transducer to the X-MCB2.

The reference circuit below demonstrates how to connect a wheatstone bridge to one of the analog inputs on the X-MCB2. Various instruments are configured in a wheatstone bridge arragement, including load-cells and strain guages.

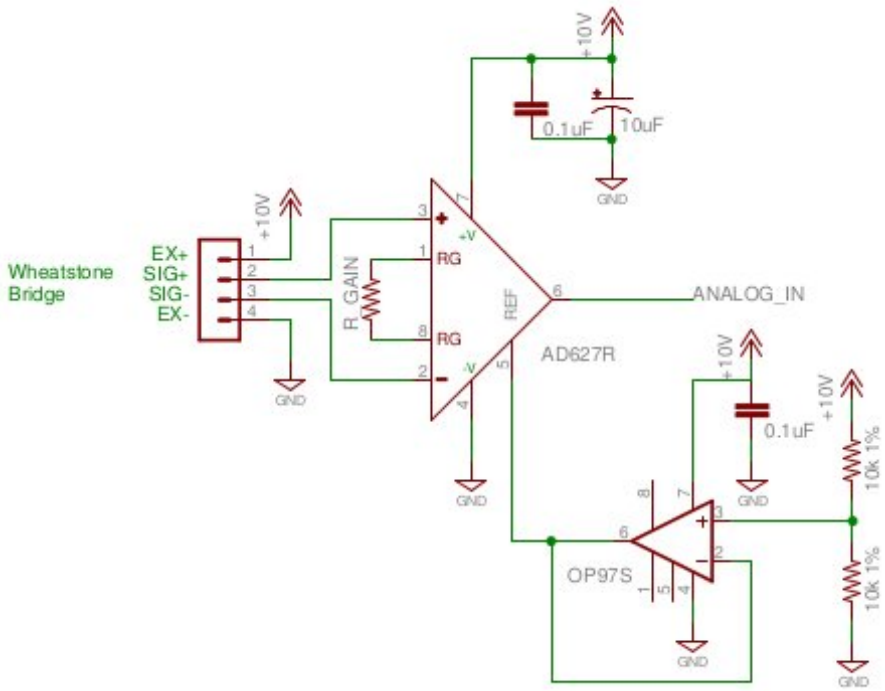

R_GAIN's value should be chosen so that a positive full scale of the instrument produces 10V at the analog input of the X-MCB2 and a negative full scale produces 0V. The OP97 op-amp provides an offset of 5V to the amplified value so that no load on the instrument produces an output of 5V.

The reference circuit below demonstrates interfacing a thermocouple to the X-MCB2. Depending on the application, an offset voltage may need to be provided.

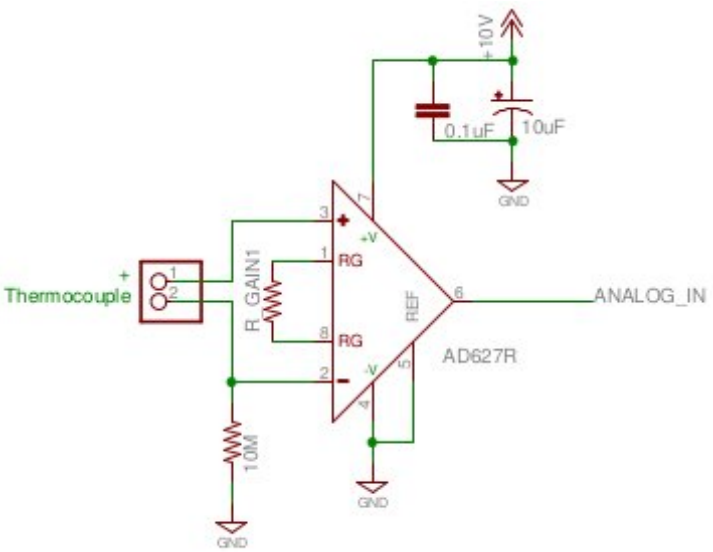

11. Troubleshooting X-Series Motion Devices

The following sections contain tips for troubleshooting common problems. If the device is unable to communicate, and it is operating erratically, a manual factory reset can be performed through the following steps. Note that this will reset most settings.

1. Power Off the device
2. Push and hold the knob for the first Axis (if applicable)
3. Power On the device
4. Continue to hold the knob in until the blue LED is lit (~5 seconds), then release.

The device has been returned to its factory defaults and can be configured as per the steps in Initial Setup.

11.1. Front Panel Indicators

Green LED On

The device is powered on and is operating normally.

Green LED Fades In and Out

The device is parked.

Issue a tools parking unpark (T:65) command, or home (T:1) the device.

Green LED Flashes Slowly

The operating conditions of the device are outside of the recommended range.

This will occur when the supply voltage is either over or under the recommended range, the internal temperature has exceeded the set limit, or the driver has been disabled. Check the following:

- The input voltage is within the operational range of the device. This can be read from the device with the get system.voltage command.
- The device temperature is within range. This can be read from the device with the get system.temperature command.
- The driver is not disabled. If the driver is disabled the result of the warnings command will contain the FD flag.

Green LED Off

The device is not powered.

Check the supply connections and power adaptor for correct operation.

Red LED On or Flashing.

A critical error has occurred.

Please contact Zaber Technical Support.

Blue LED On or Flashing.

The device has slipped or stalled.

Please see the Slipping and Stalling section below.

Yellow LED Always Off or Flashes but No Reply.

There are communication errors.

Please see the Communication Errors section below.

11.2. Manual Control

Turning the knob either way results in no movement

The knob may have been disabled.

Check that the knob.enable (T:107) setting is correct.

Restore the default parameters through the system restore (T:36) command.

The device won't cover the full range of travel.

The device hasn't been homed.

Turn the knob anti-clockwise until the device reaches the fully retracted position (closest to the motor). The device will home and the full range of travel available.

11.3. Unexpected Behaviour

The device doesn't respond to a move command.

The device needs to be homed before use.

Send the home (T:1) command.

The device is moving on its own and running against the ends of travel.

The position encoder has de-synchronized.

Reset the device by power cycling it or sending the system reset (T:0) command, then re-initialize it with the home (T:1) command.

The device is moving very slowly. It used to move faster.

The speed settings may have been changed inadvertently.

Send a system restore (T:36) command.

The device makes louder than normal noise during travel and is frequently slipping.

This condition happens if the thrust needed is more than the thrust available from the device.

Check the following:

- The force on the device is less than the maximum thrust.
- The voltage matches the specified voltage. Read the voltage using the get system.voltage command. Voltage less than the specified voltage for the device will reduce the device's maximum thrust.

Test the following:

- Try a slower target velocity. Stepper motors produce more thrust when moving slowly.

- Try a lower acceleration and deceleration.
- Clean the screw and lightly re-grease it with a grease that does not degrade plastics.

The device has repeatability errors smaller than 4 full steps.

If steps aren't being skipped, friction or loose parts may still cause some variation when returning to a position.

Please contact Zaber Technical Support.

The device doesn't cover the full range of travel, or runs into the end.

A setting might have been inadvertently changed.

- home (T:1) the device to see if this corrects the behaviour.
- Send a system restore (T:36) command.
- Ensure that the peripheralID setting of each axis corresponds to the attached device. A list of peripheral ids are available at the Peripheral IDs page.

11.4. Communication Errors

There is no communication with the device; the Yellow LED does not come on or flash.

There are several things that should be checked:

- Make sure the correct serial port is selected. Try selecting other serial ports in the software.
- Check the baud rate, hand shaking, parity, stop bit, etc. when configuring the serial communications software. The required settings are listed in the RS-232 Communications section above.
- Make sure there are no bent pins in the ends of all the data cables
- Make sure the device is powered. The Green LED should be on.
- If the computer is a laptop running on batteries, try plugging in the power. Some laptops disable the serial ports when running on batteries.
- Make sure a null modem adaptor or cable is not being used.
- Make sure the correct adaptors(if any) are being used. Refer to the pinouts in the RS-232 Communications section above.
- If the problem was encountered when trying to control the device with custom software, try using one of the demo programs from the Zaber website to verify that the hardware is functioning properly.

Two or more devices both respond to commands sent to device 1.

Most devices are shipped with their device number set as 1. If you connect the devices through Zaber Console, you will be prompted to renumber them. If you aren't able to install and open Zaber Console, send the renumber (T:2) command in the software you are using to set all of the device numbers to different values.

The Yellow LED comes on briefly when sending a command, but the device does not move and does not reply.

Check baud rate, hand shaking, parity, stop bit, etc. are set as per the RS-232 Communications defaults.

The device numbers may not be what is expected, issue a renumber (T:2) command.

Make sure that the computer does not transmit anything else while the devices renumber.

If using the Binary Protocol, check the following:

- 6 bytes are transmitted and that the device number and command are valid.
- The software does not transmit any control characters such as line feed and spaces.
- That the serial port is not configured with a termination character (it often defaults to linefeed).

If problems are encountered when using custom software, try using one of the demo programs from the Zaber website to verify that the hardware works.

The device does not behave as expected when software sends it a series of commands.

The computer might be set to Unicode. This is common for languages that use non-Latin based characters. Go to Control Panel/Regional and Language Options/Advanced. Select a language for non-unicode programs. This should be English or another Latin based character language.

Check what is being sent out of the serial port. stackoverflow.com has a list of some tools to monitor serial ports.

In Binary mode, the device does not send replies but otherwise works.

Auto-reply might have been disabled via T:101.

Send a system restore (T:36) command.

If the problem is encountered when trying to control the device with custom software:

- Use a demo program from the Zaber website to verify that the hardware is functioning properly.
- Make sure that the receiving part of the code or commercial package is correct.
- Check the serial port settings are correct.
- Check connectors for bent or broken pins.

In Binary mode, the device sometimes returns fewer than 6 bytes.

This typically indicates a problem with the serial port settings. Some serial ports are set to automatically recognize and remove specific control characters such as carriage returns when they appear in the RS-232 receive buffer.

Check that the settings are correct and are not removing or replacing characters.

11.5. Slipping and Stalling

The device moves smoothly, but only moves for a short time then stops. The Blue LED is flashing but the device is not actually slipping or stalling.

The internal encoder counter needs to be re-initialized. Reset the device by power cycling it or sending system reset (T:0) command, then re-initialize it with the home (T:1) command.

Ground the device and avoid operating it under statically noisy environment.

The device makes noise but does not move. The Blue LED is flashing.

The device is stalling.

Try removing all external loads. If the device now extends and retracts normally, the problem is excessive load. Try to reduce the load and ensure the load is less than the maximum thrust. A higher thrust or torque can be achieved by lowering the speed of the device using the maxspeed (T:42) setting.

If a device is stalling with no external load at default speed and acceleration settings then it requires servicing.

12. Warranty and Repair

For Zaber's policies on warranty and repair, please refer to the Ordering Policies.

12.1. Standard products

Standard products are any part numbers that do not contain the suffix ENG followed by a 4 digit number. Most, but not all, standard products are listed for sale on our website. All standard Zaber products are backed by a one-month satisfaction guarantee. If you are not satisfied with your purchase, we will refund your payment minus any shipping charges. Goods must be in brand new saleable condition with no marks. Zaber products are guaranteed for one year. During this period Zaber will repair any products with faults due to manufacturing defects, free of charge.

12.2. Custom products

Custom products are any part numbers containing the suffix ENG followed by a 4 digit number. Each of these products has been designed for a custom application for a particular customer. Custom products are guaranteed for one year, unless explicitly stated otherwise. During this period Zaber will repair any products with faults due to manufacturing defects, free of charge.

12.3. How to return products

Customers with devices in need of return or repair should contact Zaber to obtain an RMA form which must be filled out and sent back to us to receive an RMA number. The RMA form contains instructions for packing and returning the device. The specified RMA number must be included on the shipment to ensure timely processing.

13. Email Updates

If you would like to receive our periodic email newsletter including product updates and promotions, please sign up online at www.zaber.com (news section). Newsletters typically include a promotional offer worth at least $100.

14. Contact Information

Contact Zaber Technologies Inc by any of the following methods:

Fax	**1-604-648-8033**
Mail	**#2 - 605 West Kent Ave. N., Vancouver, British Columbia, Canada, V6P 6T7**
Web	**www.zaber.com**
Email	**Please visit our website for up to date email contact information.**

The original instructions for this product are available at https://www.zaber.com/manuals/X-MCB2.

15. Appendix A - Available Communications Ports

15.1. Finding Installed Serial Ports

15.1.1. Windows

1. Open Search or Run from the Start Menu or Taskbar, type "Device Manager" and press enter.

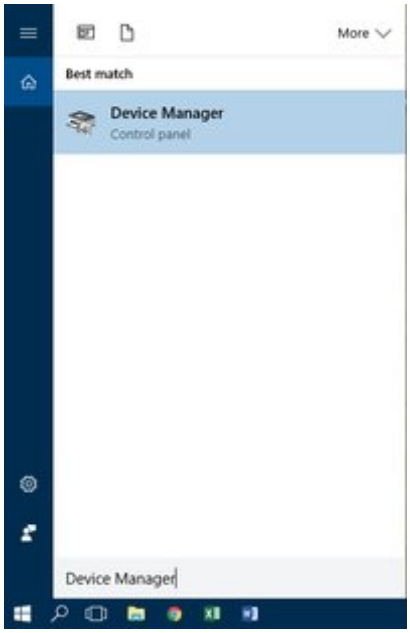

2. Expand the Ports (COM & LPT) category.

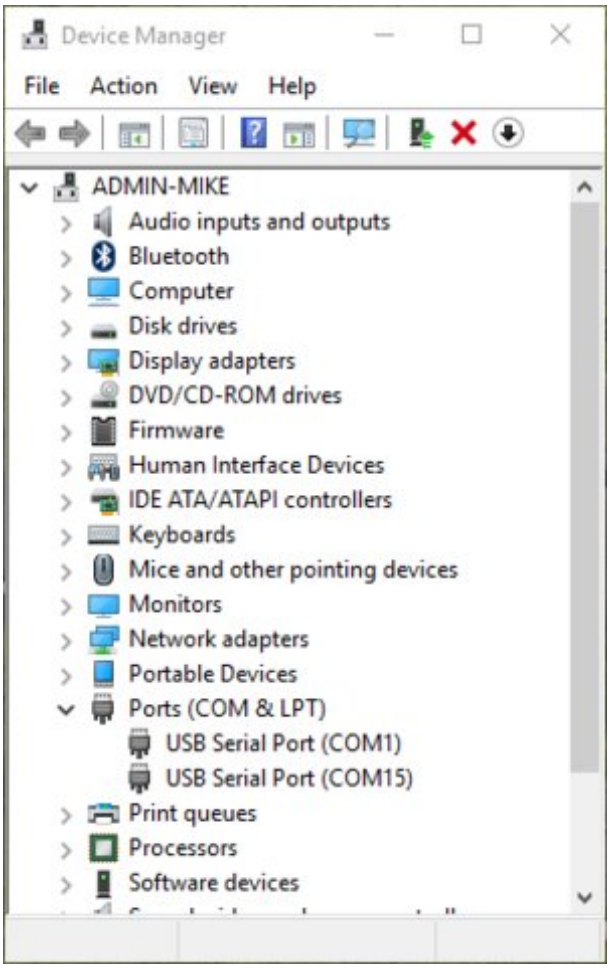

- In this example there are two serial ports available (COM1 and COM15), which are both USB adaptors.

15.1.2. Linux

1. Finding devices
   - Open a terminal and execute the following command:

dmesg | grep -E ttyU\?S ↵

- The response will be similar to the following:
  [2.029214] serial8250: ttyS0 at I/O 0x3f8 (irq = 4) is a 16550A
  [2.432572] 00:07: ttyS0 at I/O 0x3f8 (irq = 4) is a 16550A
  [2.468149] 0000:00:03.3: ttyS4 at I/O 0xec98 (irq = 17) is a 16550A
  [13.514432] usb 7-2: FTDI USB Serial Device converter now attached to ttyUSB0

- This shows that there are 3 serial ports available: ttyS0, ttyS4 and ttyUSB0 (a

USB adaptor)

2. Checking port permissions
   - Using the ports found above, execute the following command

ls -l /dev/tty{S0, S4, USB0} ↵

   - The permissions, given below, show that a user has to be root or a member of the dialout group to be able to access these devices
     crw-rw---- 1 root dialout 4, 64 Oct 31 06:44 /dev/ttyS0
     crw-rw---- 1 root dialout 4, 68 Oct 31 06:45 /dev/ttyS4
     crw-rw---- 1 root dialout 188, 0 Oct 31 07:58 /dev/ttyUSB0

3. Checking group membership groups ↵
   - The output will be similar to the following:
     adm cdrom sudo dip plugdev users lpadmin sambashare
     Notice that dialout is not in the list
   - A user can be added to the dialout group with the following command

sudo adduser $USER dialout ↵

   - Group membership will not take effect until the next logon.

15.1.3. OSX

1. Finding devices
   - Open a terminal and execute the following command:

ls /dev/cu.*serial*

   - The response will be similar to the following:
     /dev/cu.usbserial-FTB3QAET
     /dev/cu.usbserial-FTEJJ1YW

   - This shows that there are two serial ports available, both of which happen to be USB adaptors.
   - There may be other devices that match this query, such as keyboards or some web cameras. To determine which one corresponds to your USB serial cable, try repeating the command with and without the cable connected to the computer, to see which one appears and disappears.

16. Appendix B - USB Driver Installation

16.1. Compatible Devices

The following Zaber controllers include a USB 2.0 Type-B port:

- X-MCB1
- X-MCB2
- A-MCB2

When connected and configured following the instructions on this page, they will create a virtual serial (COM) port on your computer for communication.

If you are trying to connect one of Zaber's X-USBDC, T-USBDC, or T-USB serial to USB adaptors, go to the Software page for instructions.

16.2. Windows

Microsoft Windows requires a driver to be installed for the USB connection to operate correctly.

16.2.1. Download

1. Download the driver here: Zaber Integrated USB Driver.
2. Extract the files to a handy location: Downloads, My Documents or the Desktop are good places.
3. Connect power to the controller and connect the USB cable from the controller to the computer.
4. Follow the additional steps for your version of Windows.

16.2.2. Windows Vista, 7 & 8

1. Windows will detect the device connection and attempt to automatically install drivers. After a minute or so this will fail with a message that the device is not working correctly. Continue on with the steps below.
2. Right click on My Computer and select Manage.
3. Select Device Manager from the list on the left. Under 'Other devices', you should see an entry with the name of the Zaber controller that is connected.

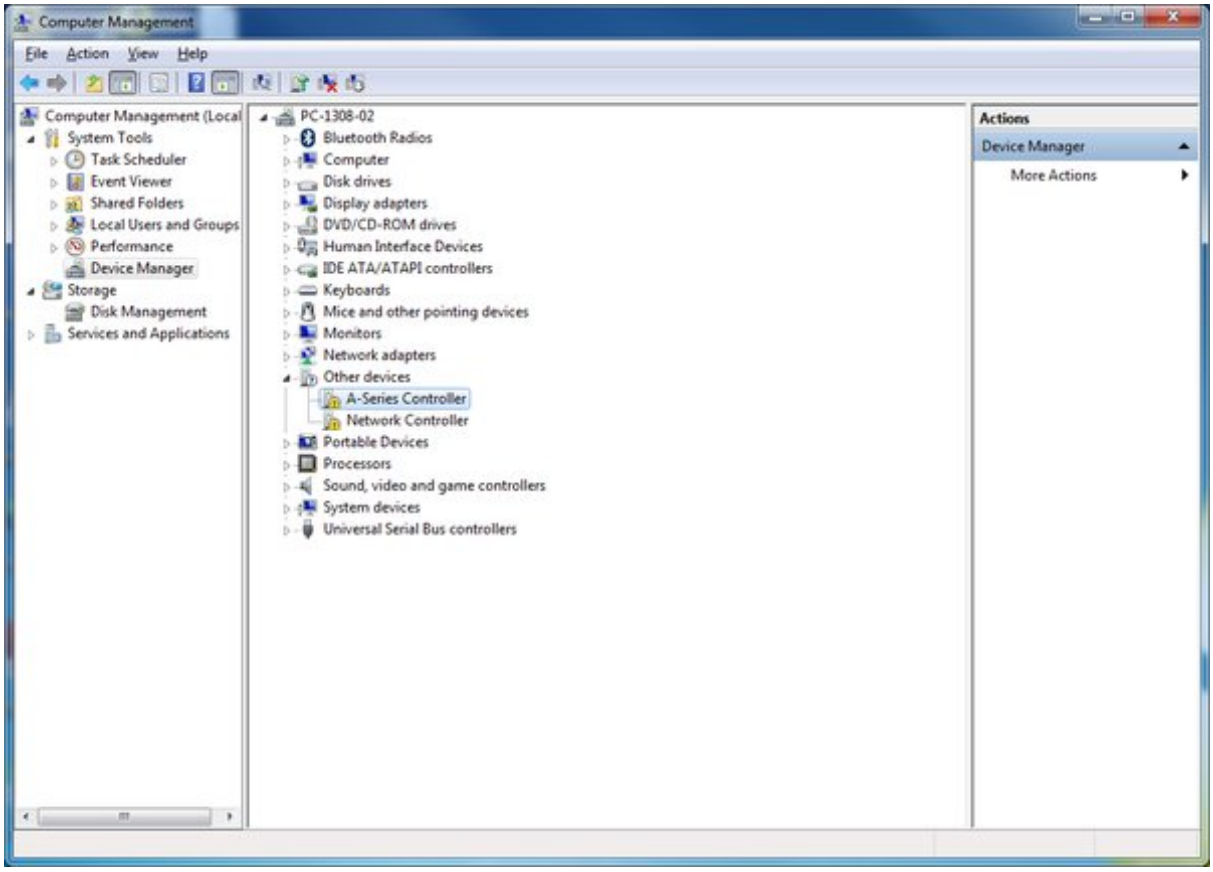

4. Right click on this entry and select 'Update Driver Software...'

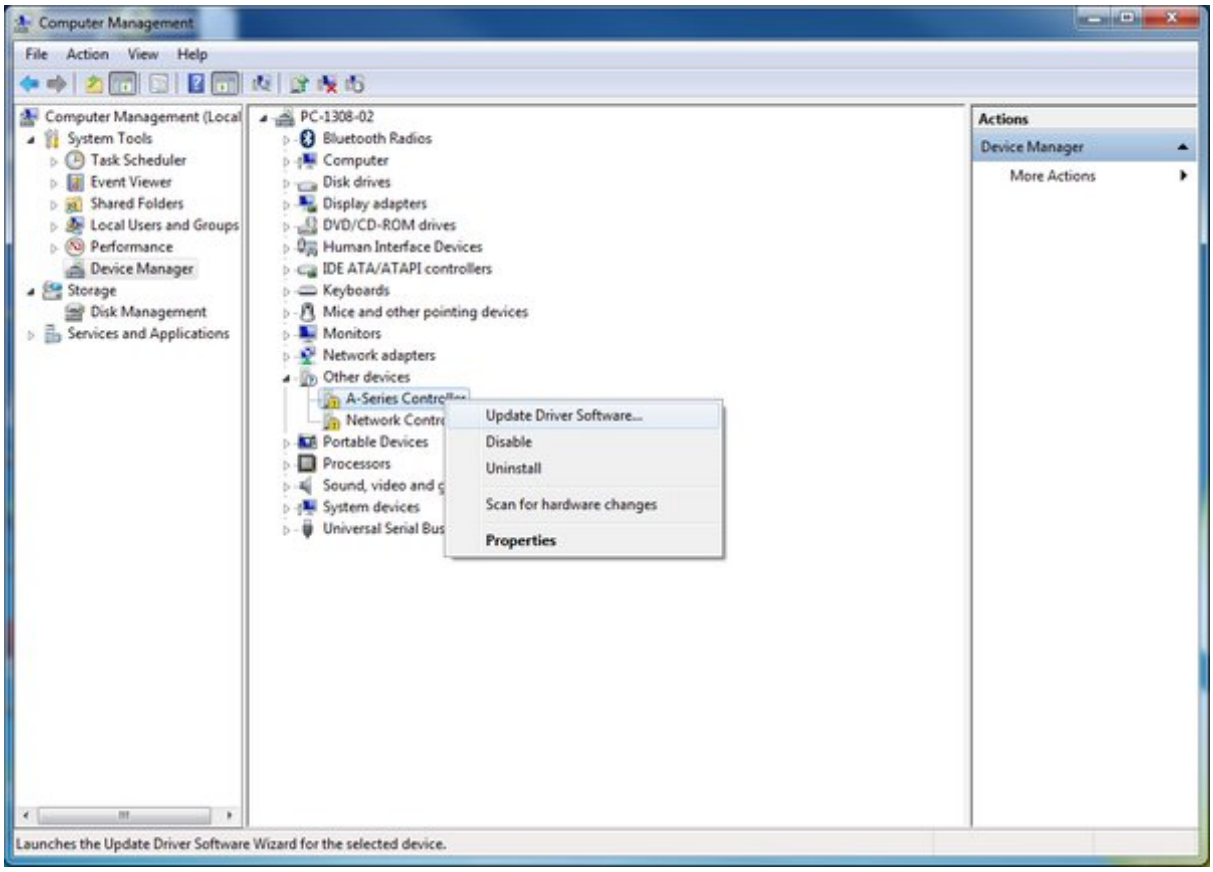

5. Choose 'Browse my computer for driver software'.

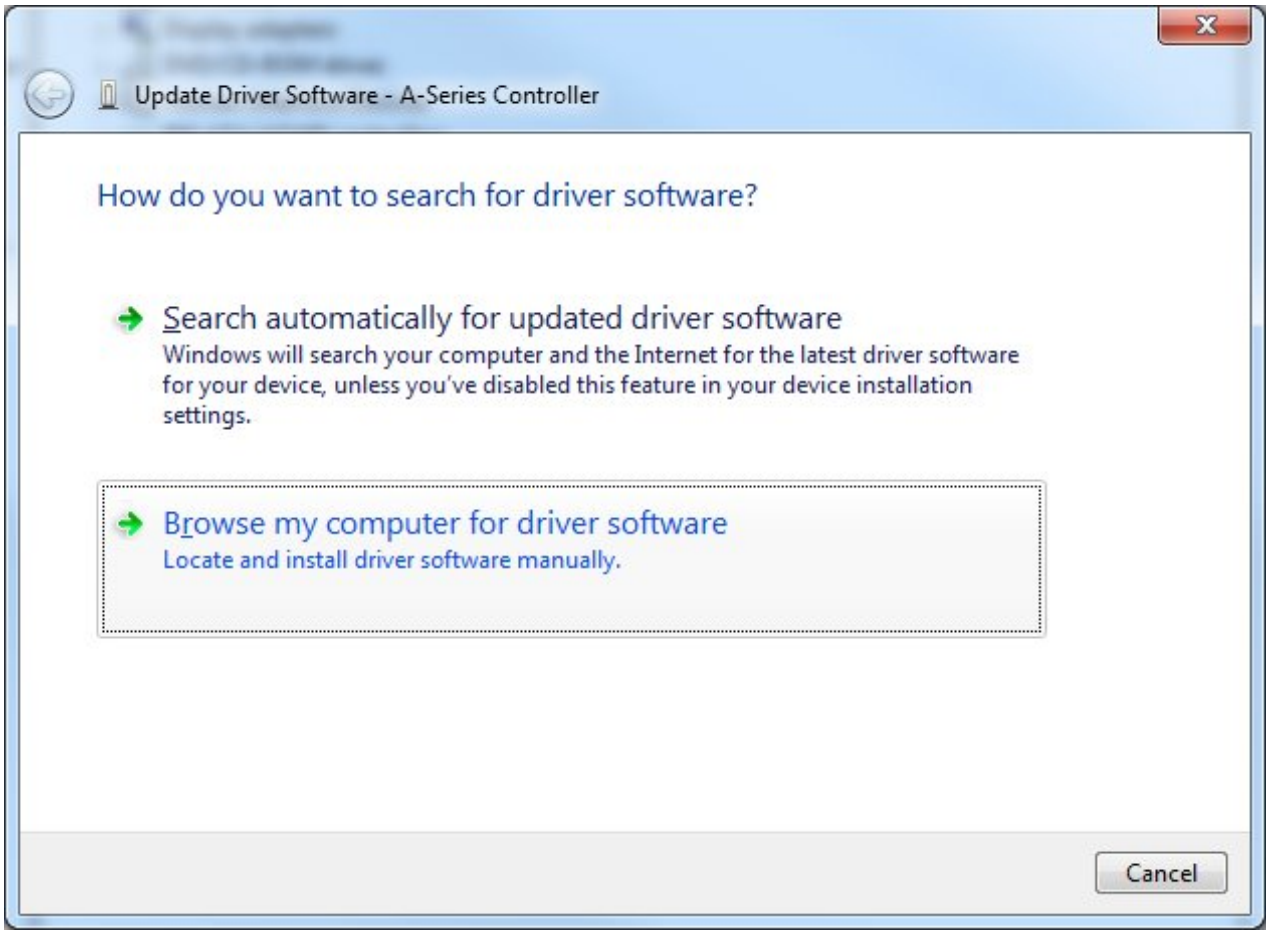

6. Click the Browse button and select the location where you extracted the driver to.

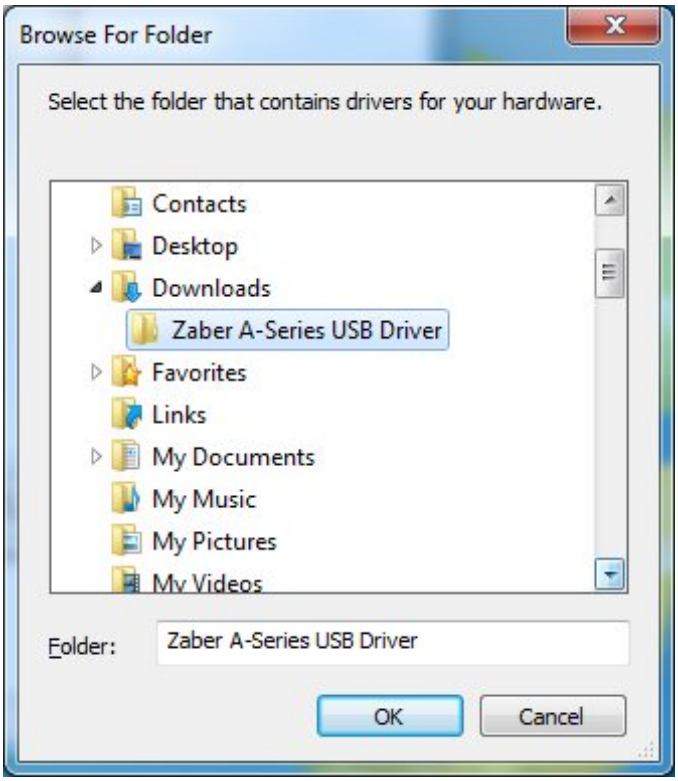
Browse For Folder
Select the folder that contains drivers for your hardware.
Contacts
Desktop
Downloads
Zaber A-Series USB Driver
Favorites
Links
My Documents
My Music
My Pictures
My Videos
Folder:
Zaber A-Series USB Driver
OK
Cancel

7. Click Next.

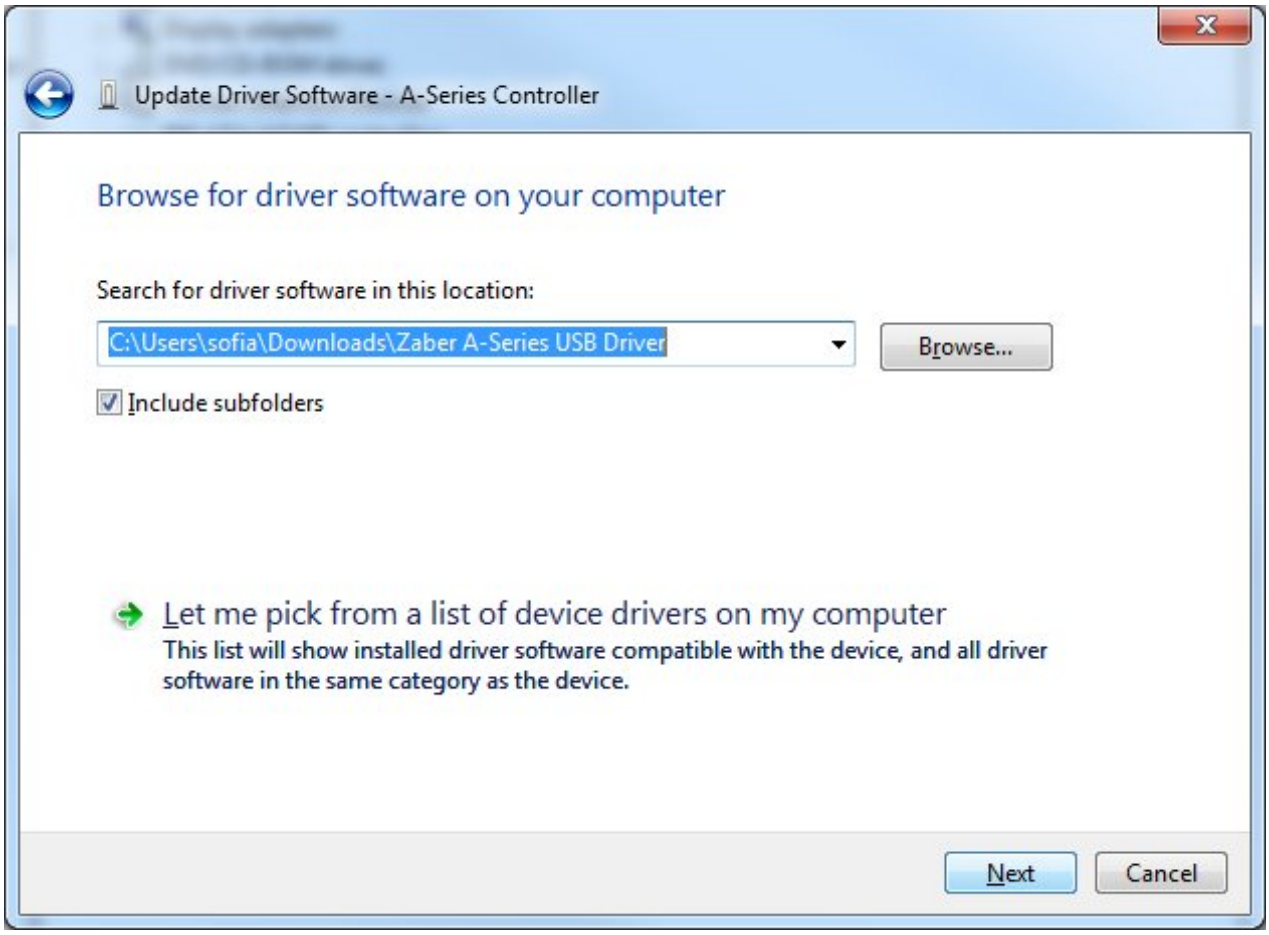

8. Click Install.

9. Click Close. Your controller is now available and should appear in the Ports (COM & LPT) section of the Device Manager.

16.2.3. Windows XP

1. Windows will automatically detect the connection of the controller.

2. Once the New Hardware Found wizard starts, select 'No, not this time' and click next.

If the wizard doesn't start:

1. Right click on My Computer and select Manage.
2. Select Device Manager from the list on the left.
3. Under 'Unknown Devices', you should see an entry with the name of the Zaber controller that is connected.
4. Right click on this entry and select 'Update Driver'.

3. Select 'Install from a specific location' and click Next.

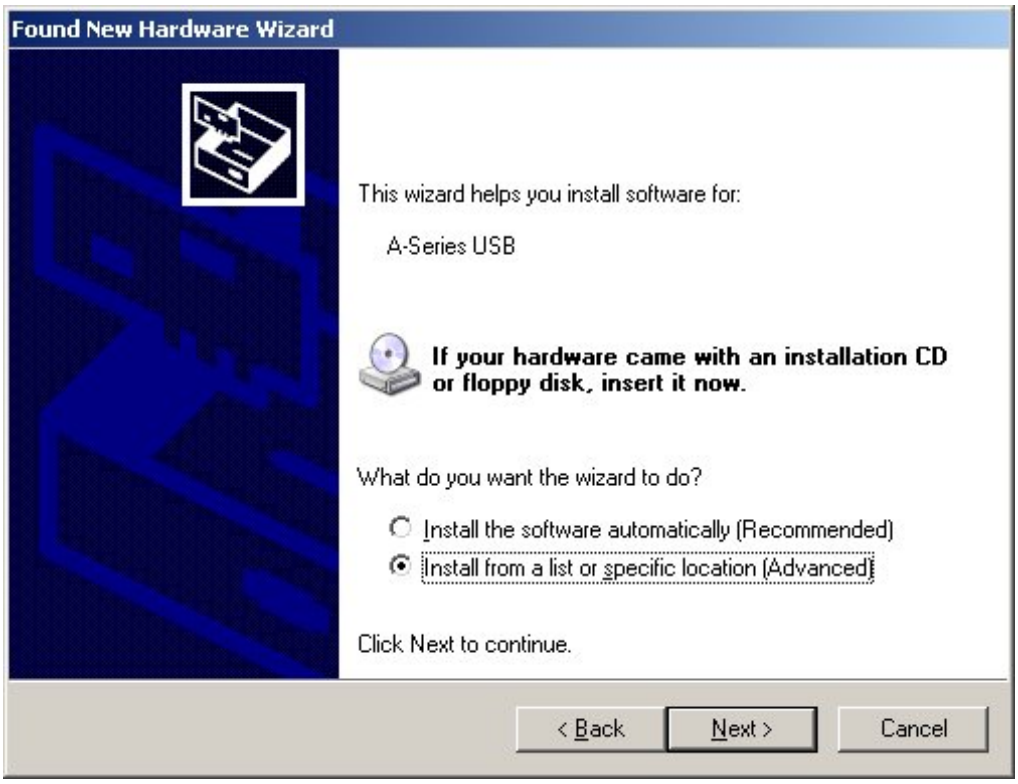

4. Click the Browse button and select the location where you extracted the driver to.

5. Click Next.

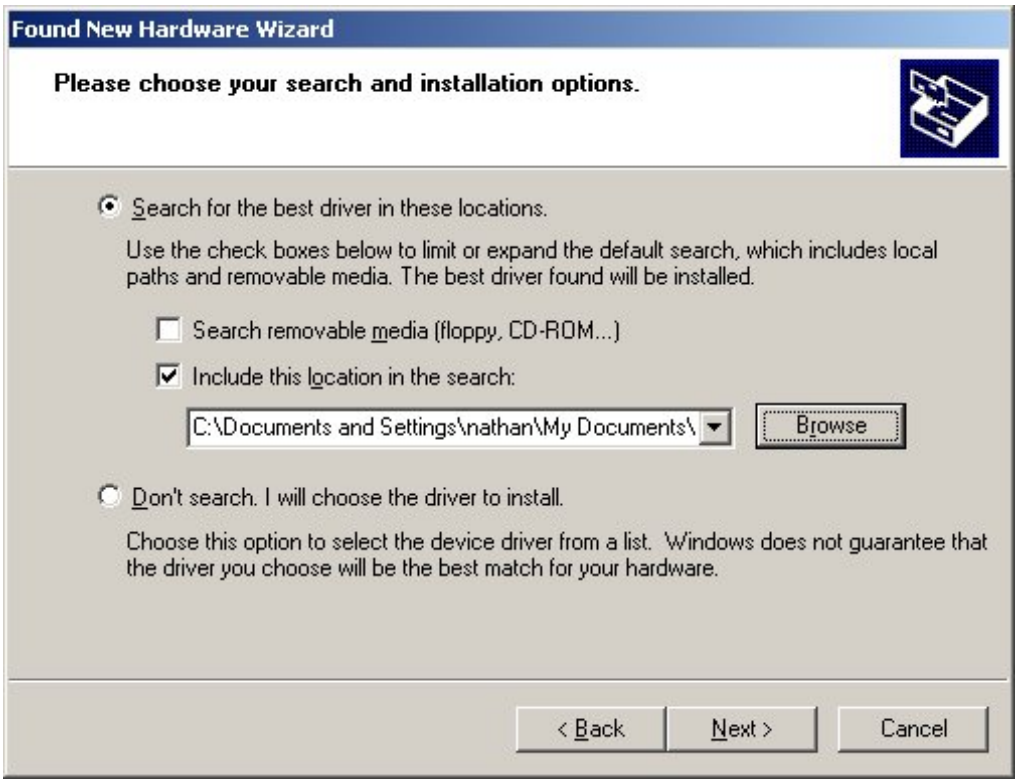

6. Select Continue Anyway.

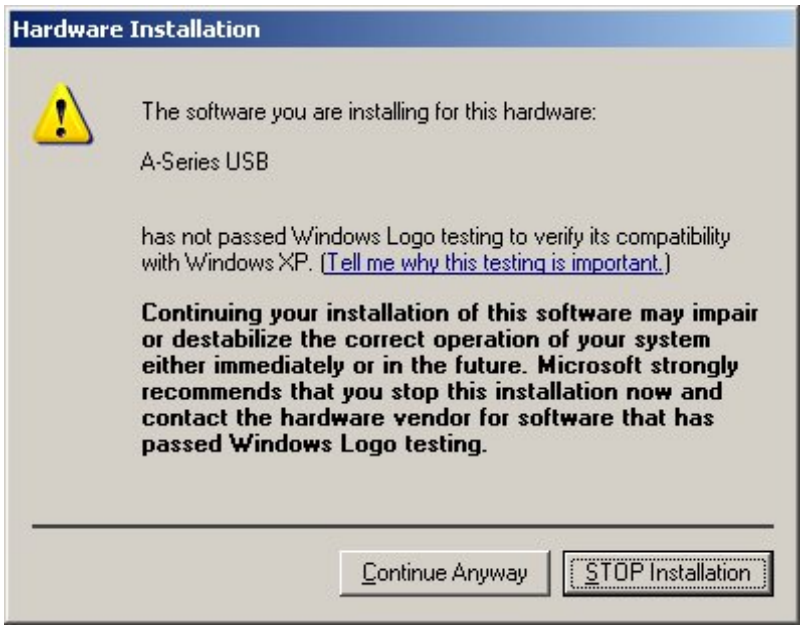

7. Click Finish. Your controller is now available and should appear in the Ports (COM & LPT) section of the Device Manager.

16.3. Linux

USB Communications Device Class (CDC) devices are supported in kernel 2.4 and above through the cdc_acm module. No special configuration or drivers are needed.

The controller will appear as a ttyACMx device. The kernel log (available through dmesg) details the device detection and the assigned device, in this case /dev/ttyACM0

```
[94929.668171] usb 3-4.1.3: new full-speed USB device number 92 using
xhci_hcd
[94929.686563] usb 3-4.1.3: New USB device found, idVendor=2939,
idProduct=cafe
[94929.686572] usb 3-4.1.3: New USB device strings: Mfr=1, Product=2,
SerialNumber=3
[94929.686577] usb 3-4.1.3: Product: X-MCB2
[94929.686581] usb 3-4.1.3: Manufacturer: Zaber Technologies Inc.
[94929.686585] usb 3-4.1.3: SerialNumber: 1
[94929.687436] cdc_acm 3-4.1.3:1.0: This device cannot do calls on its own.
It is not a modem.
[94929.687471] cdc_acm 3-4.1.3:1.0: ttyACM0: USB ACM device
```

If the device does not appear in the /dev directory when connected, the device may need to be manually attached. To do this, enter the commands below corresponding to your controller:

X-MCB2:

```
echo "0x2939 0x495b" > /sys/bus/usb/drivers/cdc_acm/new_id
```

X-MCB1:

```
echo "0x2939 0x495a" > /sys/bus/usb/drivers/cdc_acm/new_id
```

A-MCB2:

```
echo "0x2939 0x459" > /sys/bus/usb/drivers/cdc_acm/new_id
```

Note: In some configurations, modem manager will try to query the device when it is connected. This won't affect device operation but can cause the port to be unavailable for several seconds.

16.4. OS X

USB Communications Device Class (CDC) devices are supported in 10.5 and above. No special configuration or drivers are needed.

The controller will appear as a tty.usbmodem device. The kernel log (available through dmesg) details the device detection and the assigned device, in this case /dev/tty.usbmodem1421

```
AppleUSBCDCACMData: Version number - 4.1.23, Input buffers 8, Output buffers
16
AppleUSBCDC: Version number - 4.1.23
$ ls /dev/tty.usb*
/dev/tty.usbmodem1421
```

17. Product Drawing

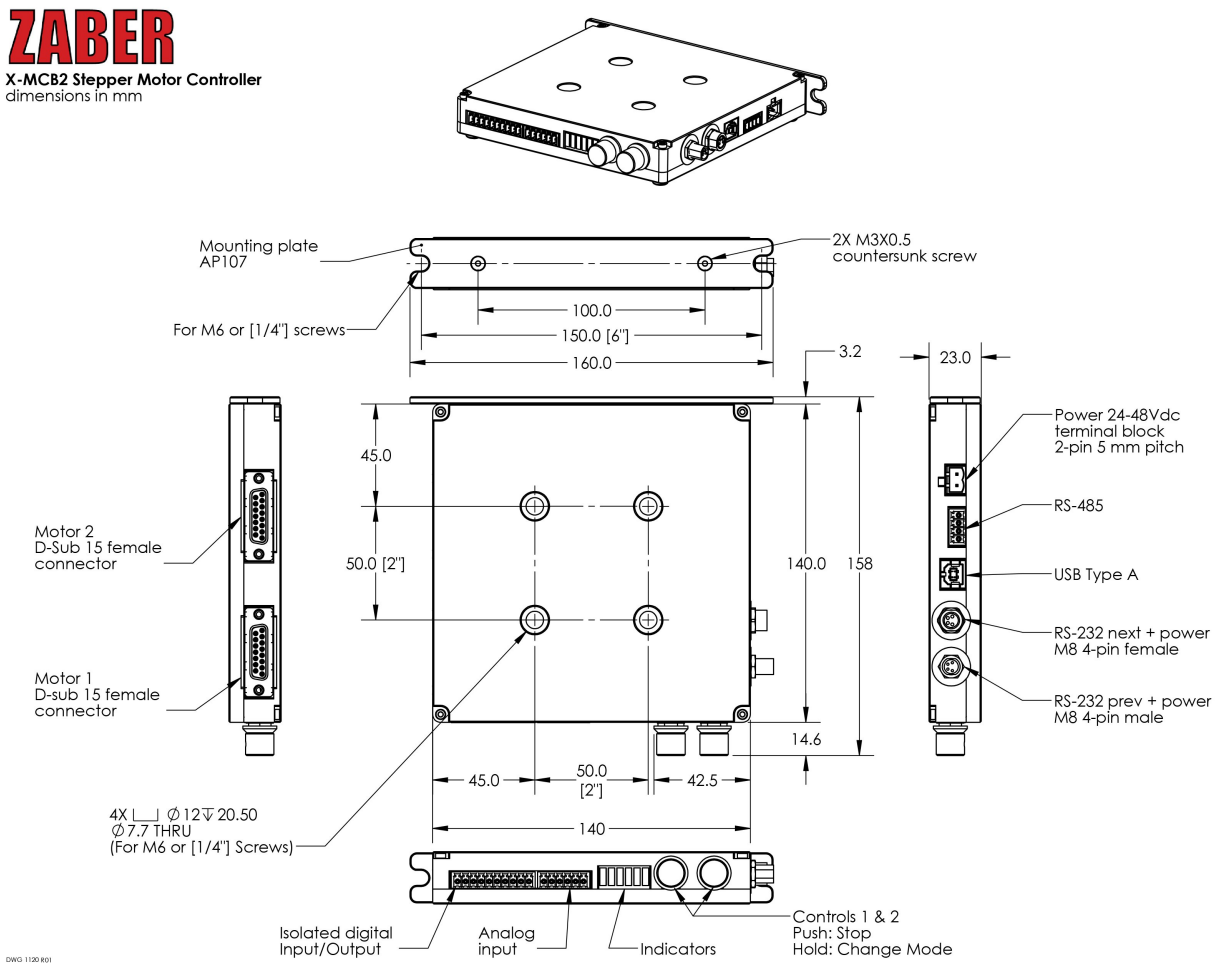

18. Specifications

Specification	Value	Alternate Unit
Communication Interface	RS-232, RS-485, USB 2.0	
Communication Protocol	Zaber ASCII (Default), Zaber Binary	
Maximum Current Draw	Motor and supply voltage dependent	
Power Supply	24-48 VDC	
Power Plug	Screw Terminal	
Controller Maximum Current Per Phase	1410 mA	2,000 mA peak
Motor Connection	D-Sub 15 female	
Default Resolution	1/64 of a step	
Data Cable Connection	Locking 4-pin M8, USB-B, Buchanan 4-pin 3.5 mm	
Manual Control	Indexed knobs with push switches	
Axes of Motion	2	
LED Indicators	Power, Error, Motor 1, Encoder 1, Motor 2, Encoder 2	
Operating Temperature Range	0 to 50 °C	
RoHS Compliant	Yes	
CE Compliant	Yes	
Limit Sensors per Axis	4	
Isolated Digital Input	4	
Isolated Digital Output	4	
Analog Input	4	
Analog Input Range	0-10 V	
Analog Input Resolution	0.0125 V	
2D Primitives Supported	Lines, Arcs, Circles	
5 V Power Out Current Rating	Total 200 mA	